# 4606-9101 LCD ANNUNCIATOR

PRODUCT INFORMATION

FEATURES:

- UL LISTED
- FLUSH MOUNT ON STANDARD ELECTRICAL BOXES

SPECIFICATIONS:

- VOLTAGE: 18 TO 32 VDC, SYSTEM SUPPLIED
- NORMAL OPERATING CURRENT: 110 mA (LED BACKLIGHTING IS ON)
- BATTERY STANDBY CURRENT: 65 mA (DURING BATTERY BACKUP, LED LED BACKLIGHTING IS TURNED OFF AFTER 30 SECONDS WITHOUT SWITCH ACTIVITY).
- ALARM CURRENT: 140 mA MAXIMUM (LED BACKLIGHTING IS ON AND TONE-ALERT IS SOUNDING).
- OPERATING TEMPERATURE: 32° F TO 120° F
- HUMIDITY RANGE: UP TO 93% RH, NON-CONDENSING AT 100 ° F
- STANDARD TRIM: BEIGE (SUPPLIED WITH BOTH SLOTTED AND TAMPERPROOF SCREWS)

COMMUNICATIONS

- TYPE: N2 EXTERNAL ANNUNCIATOR COMMUNICATIONS LINE FROM 4010 FIRE ALARM CONTROL PANEL
- CAPACITY: UP TO 6 ANNUNCIATOR MODULES TOTAL, 4606-9101 OR 4605 SERIES, 24 POINT I/O MODULES
- WIRING REQUIREMENTS:
  1. #18 AWG TWISTED, SHIELDED PAIR FOR COMMUNICATIONS
  2. #18 TO #12 AWG FOR 24 VDC SYSTEM POWER

MOUNTING INFORMATION

- TRIM DIMENSIONS: 4 1/2" H X 11 13/16" W
- ASSEMBLY DEPTH: 1 5/16"
- STANDARD TRIM FINISH: STEEL, PAINTED BEIGE
- 4603-9111, OPTIONAL TRIM: BRUSHED ALUMINUM

OPERATION:

ALL SWITCHES ON THE ANNUNCIATOR ARE CONTROLLED BY THE "ENABLE" KEY SWITCH WITH A KEY THAT IS REMOVED ONLY IN THE DISABLED POSITION. WHEN ENABLED, NOTIFICATION APPLIANCES CAN BE DEACTIVATED BY PRESSING THE "ALARM SILENCE" SWITCH. PRESSING THE "SYSTEM RESET" SWITCH RESTORES THE SYSTEM TO NORMAL OPERATION. WHEN SYSTEM ACTIVITY IS NORMAL, THE LCD DISPLAY THE TIME, DATE AND "SYSTEM IS NORMAL".

WIRING NOTES:

1. ALL WIRING TO BE No. 18 AWG OR TO LOCAL CODE. 18 AWG TWISTED SHIELDED PAIR RECOMMENDED. CONSULT STR SALES ENGINEERING FOR EXCEPTIONS. MAXIMUM LINE DISTANCE 2500 FT.
2. ALL WIRING SUPERVISED
3. WHEN WIRING LEAVES THE BUILDING, OVER VOLTAGE PROTECTORS ARE REQUIRED. USE ONE 2081-9044 WHERE WIRING LEAVES THE BUILDING, AND ONE WHERE IT ENTERS THE NEXT BUILDING. TWO 2081-9044 MAXIMUM.
4. THE "OUT" TERMINALS (TB1-2,4,6,8,10) ALLOW DAISY-CHAINING OF N2-COMM AND POWER SIGNALS TO OTHER N2 DEVICES.
5. N2-COMM SHIELDS ARE TO BE CONNECTED TO EARTH GROUND AT ONE END OF ENTIRE N2 LINE ONLY (TYPICALLY AT THE PANEL). CONTINUITY OF SHIELD MUST BE MAINTAINED THROUGHOUT THE N2 LINE. PINS 1 AND 2 OF TB1 PROVIDE A LOCATION TO COMMON UP THE SHIELD. THE SHIELDS SHOULD BE INSULATED TO INSURE THEY DO NOT SHORT TO THE ANNUNCIATORS COVER OR THE MOUNTING BOX.
6. IF THIS IS THE LAST DEVICE ON THE N2 LINE, A 100 Ω TERMINATING RESISTOR (733-974) IS TO BE PLACED ACROSS N2+ AND N2-.

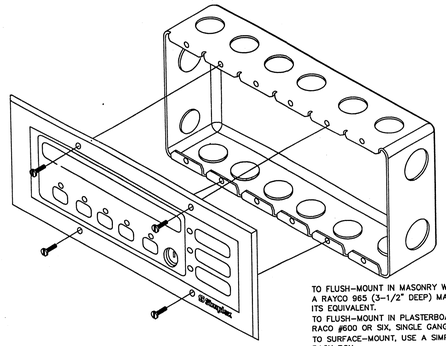

TO FLUSH-MOUNT IN MASONRY WALLS, USE A A RAYCO 965 (3-1/2" DEEP) MASONRY BOX OR ITS EQUIVALENT.
TO FLUSH-MOUNT IN PLASTERBOARD WALLS, USE A RACO #600 OR SIX, SINGLE GANG BOXES 3 1/2" DEEP MINIMUM.
TO SURFACE-MOUNT, USE A SIMPLEX 2975-9217 BACK BOX

FLUSH MOUNTING

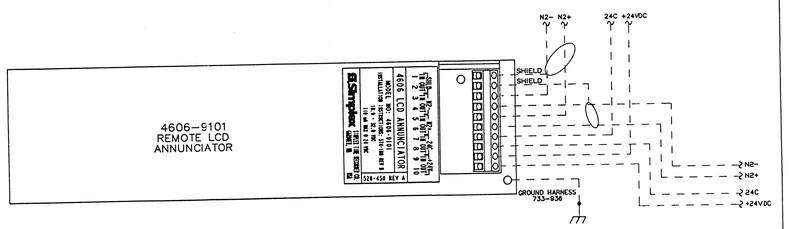


# 4099-9001 SINGLE ACTION IDNET ADDRESSABLE STATION

PRODUCT INFORMATION

FEATURES:

- UL LISTED
- SINGLE ACTION, IDNET ADDRESSABLE
- PULL LEVEL PROTRUDES WHEN ALARMED
- TAMPER RESISTANT RESET KEY LOCK
- MOUNTING: SEMI-FLUSH, SURFACE
- OPERATING TEMPERATURE RANGE: 32 - 120° F
- OPERATING HUMIDITY RANGE: 0 - 93% RH
- ADAPTER PLATES 2099-9813 OR 2099-9814 CAN BE USE FOR RETROFIT APPLICATIONS.
- 5" HIGH X 3 3/4" WIDE X 1" DEEP
- SCREW TERMINALS FOR 18 TO 14 AWG WIRE
- ADDRESSED BY MEANS OF AN 8 POSITION DIP SWITCH
- COMPATIBLE WITH IDNet/MAPNET

OPERATION:

ACTIVATION:
4099-9001 SINGLE ACTION STATION REQUIRES A FIRM DOWNWARD PULL TO ACTIVATE THE ALARM SWITCH. COMPLETING THIS ACTION BREAKS AN INTERNAL PLASTIC BREAK-ROD THAT IS VISIBLE BELOW THE PULL LEVER (USE OF PLASTIC ROD IS OPTIONAL). THE PULL LEVEL LATCHES INTO THE ALARM POSITION AND REMAINS EXTENDED OUT OF THE HOUSING TO PROVIDE A VISIBLE INDICATION.

RESETTING
4099-9001 SINGLE ACTION STATION REQUIRES A KEY TO RESET THE ACTIVATION LEVER AND DEACTIVATE THE ALARM SWITCH. (IF OPTIONAL PLASTIC BREAK ROD WAS USED IT MUST BE REPLACED)

CONSTRUCTION:

STATION HOUSING AND PULL LEVER ARE CONSTRUCTED OF CHIP RESISTANT AND DIRT RESISTANT, HIGH IMPACT LEXAN. HOUSING IS RED WITH RAISED WHITE LETTERING AND PULL LEVER IS WHITE WITH RED RAISED LETTERING.
* LEXAN IS A REGISTERED TRADEMARK OF THE GENERAL ELECTRIC CO.

APPLICATION:

PULL STATIONS SHALL BE INSTALLED IN ACCORDANCE WITH NFPA 72 AND ADA GUIDE LINES.

INTRODUCTION:

THE 4099-9001 ADDRESSABLE PULL STATION PROVIDES TWO-STATE STATUS INFORMATION (NORMAL AND SHORT) TO THE 4010 FIRE ALARM CONTROL PANEL (FACP) VIA THE IDNET CHANNEL. THE IDNET CHANNEL PROVIDES THE COMMUNICATION LINK BETWEEN PULL STATION AND 4010 FACP AND POWERS THE ENTIRE CIRCUITRY.

WIRING:

1. ALL WIRING TO COMPLY WITH LOCAL CODE.
2. CONDUCTORS MUST TEST FREE OF ALL GROUNDS.
3. MAINTAIN CORRECT POLARITY
4. IDNET LINES ARE TO BE 18 AWG TWISTED SHIELDED PAIR
5. MAXIMUM LINE RUN FROM PANEL TO FARTHEST DEVICE NOT TO EXCEED 2500 FEET.
6. MAXIMUM TOTAL WIRE (INCLUDING ALL T-TAPS) FROM PANEL NOT TO EXCEED 10,000 FEET.
7. MAXIMUM QUANTITY OF DEVICES PER CIRCUIT: 250
8. TERMINALS 1 AND 2 FOR FIELD WIRING. TERMINALS 3 AND 4 ARE FACTORY WIRING.
9. WIRE NUT, SPLICE, OR SOLDER THE SHIELD WIRES.
10. IF SHIELD IS PRESENT, IT SHOULD BE CONNECTED TO THE OUTGOING IDNET SHIELD TO PROVIDE A CONTINUOUS SHIELD OVER THE LENGTH OF THE IDNET CHANNEL. SHIELD SHOULD BE INSULATED FROM THE ELECTRICAL BOX.
11. SEE INSTALLATION INSTRUCTIONS 574-332

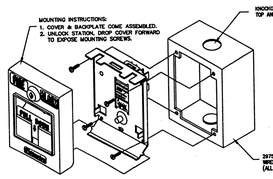


SURFACE MOUNTING

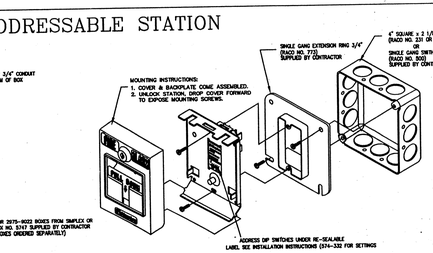


SEMI-FLUSH MOUNTING

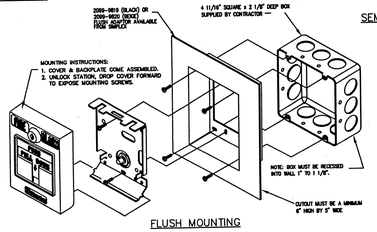


FLUSH MOUNTING

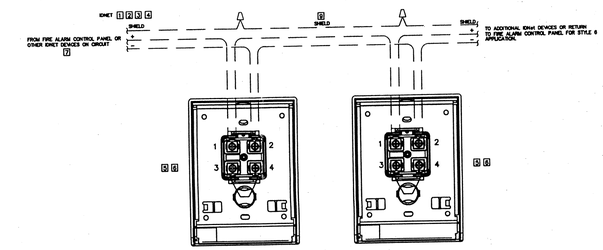


# TrueAlert™ NON-ADDRESSABLE MULTI-CANDELA AUDIO/VISIBLE NOTIFICATION APPLIANCE (ELECTRONIC HORN W/STROBE)

PRODUCT INFORMATION

FEATURES:

- CLASS B (STYLE Y) OPERATION REQUIRES CONNECTION TO A COMPATIBLE SMARTSYNC NAC OR TO SMARTSYNC CONTROL MODULE (SCM) 4905-9938
- CLASS A (STYLE Z) OPERATION WHEN CONNECTED TO THE 4905-9938 SCM OR 4100U SERIES FIRE ALARM CONTROL PANEL NAC'S

SPECIFICATIONS:

- HOUSING DIMENSIONS (INCLUDING LENS) : 5 1/8"H X 5" W X 2 3/4"D
- TEMPERATURE RANGE: 32° F TO 122° F (0° TO 50° C)
- HUMIDITY RANGE: 10% TO 93% NON-CONDENSING AT 100° F (38° C)
- TERMINAL BLOCKS FOR 18 AWG TO 12 AWG; TWO WIRES PER TERMINAL FOR IN/OUT WIRING.

STROBE
- RATED VOLTAGE RANGE: UL: REGULATED 24VDC PER UL 1971
  ULC: 20VDC TO 30VDC PER ULC S526-M878
- FLASH RATE: 1Hz
- SYNCHRONIZED MODE NAC LOADING: MAXIMUM OF 35 SYNCHRONIZED STROBES PER NAC CIRCUIT.

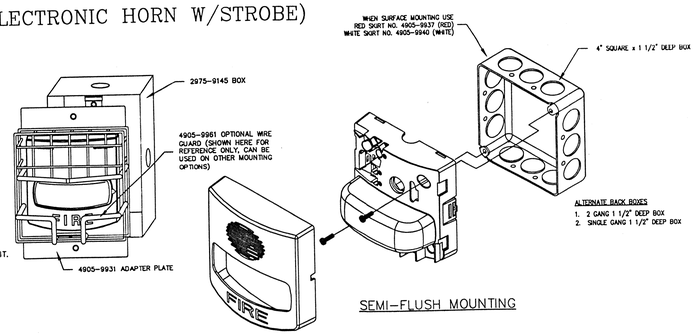


SEMI-FLUSH MOUNTING

*CURRENT DRAWS REFLECT STROBE FLASHING AND HORN ON.

| MODEL NUMBER | HOUSING COLOR | LETTERING COLOR | STROBE RATING | RMS CURRENT ● 16 VDC | 18 VDC | 24 VDC |
|---|---|---|---|---|---|---|
| 4906-9127 | RED | WHITE | 15cd | 75 mA | 70 mA | 60 mA |
| | | | 30cd | 116 mA | 101 mA | 84 mA |
| | | | 75cd | 221 mA | 184 mA | 143 mA |
| | | | 110cd | 285 mA | 243 mA | 185 mA |
| 4906-9129 | WHITE | RED | 15cd | 75 mA | 70 mA | 60 mA |
| | | | 30cd | 116 mA | 101 mA | 84 mA |
| | | | 75cd | 221 mA | 184 mA | 143 mA |
| | | | 110cd | 285 mA | 243 mA | 185 mA |

HORN
- SOUND OUTPUT CHARACTERISTICS: 2400 TO 3700 Hz SWEEP, MODULATED AT 120 Hz RATE

| HORN SOUND OUTPUT RATINGS ● 10 FT. (3m) | | | | | | |
|---|---|---|---|---|---|---|
| VOLTAGE | 16 VDC | | 24 VDC | | 33 VDC | |
| SOUND TYPE * | STEADY | CODED | STEADY | CODED | STEADY | CODED |
| REVERBERATE CHAMBER UL 464 TEST | 86 dBA | 82 dBA | 88 dBA | 84 dBA | 90 dBA | 86 dBA |
| ANECHOIC CHAMBER | 92 dBA | 91 dBA | 94 dBA | 95 dBA | 96 dBA | 96 dBA |

* CODED VALUES ARE TYPICAL OF THE OUTPUT MEASURED WITH A TEMPORAL CODED OR A MARCH TIME CODED PULSE AND WITH A SOUND LEVEL METER READING ON A "FAST" SETTING. UNDER THE SAME TEST CONDITIONS, CODED HORN OUTPUT "PEAK" SOUND LEVEL READINGS ARE TYPICALLY 4 dBA HIGHER.

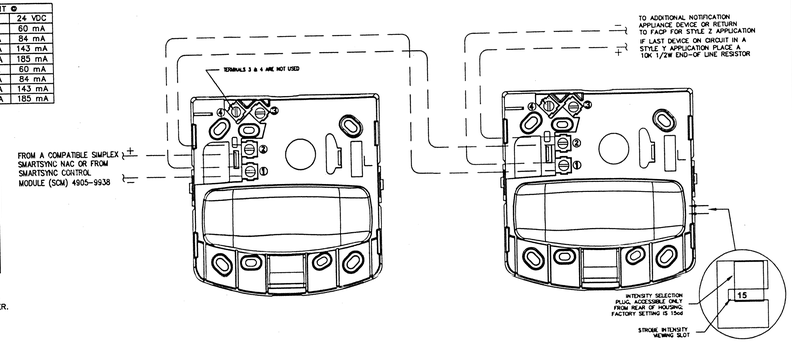


# TrueAlert™ NON-ADDRESSABLE MULTI-CANDELA VISIBLE NOTIFICATION APPLIANCE (WALL MOUNT)

PRODUCT INFORMATION

FEATURES:

- UL LISTED TO STANDARD 1971
- ADA COMPATIBLE

SYNCHRONIZATION FLASH RATE MODE FOR USE WITH:

- SEPARATE STROBE SYNCHRONIZATION MODULES THAT ARE AVAILABLE FOR CLASS B OR CLASS A OPERATION
- SEPARATE SMARTSYNC CONTROL MODULES (SCMs) THAT PROVIDE CLASS B OR CLASS A OUTPUT FROM CONVENTIONAL NAC INPUTS

SPECIFICATIONS:

- HOUSING DIMENSIONS: 5-1/8" H X 5" W X 2-3/4" D (130mm X 127mm X 70mm)
- TEMPERATURE RANGE: 32°F TO 122°F (0 TO 50°C)
- HUMIDITY RANGE: 10% TO 93% NON-CONDENSING AT 100°F (38°C)
- TERMINAL BLOCKS FOR 18AWG TO 12AWG; TWO WIRES PER TERMINAL FOR IN/OUT WIRING.

WIRING:

1. NOTIFICATION APPLIANCES ARE RATED PER INDIVIDUAL NAMEPLATE LABEL.
2. MAINTAIN CORRECT POLARITY ON TERMINAL CONNECTIONS. DO NOT LOOP WIRES UNDER TERMINALS.
3. ALL NAC WIRING CONNECTIONS ARE SUPERVISED AND POWER-LIMITED.
4. SEE INSTALLATION INSTRUCTIONS (579-548) FOR ADDITIONAL INFORMATION.

STROBE:

- RATED VOLTAGE RANGE: UL LISTED: 16 VDC TO 33 VDC PER UL 1971
  ULC LISTED: 20 VDC TO 30 VDC PER ULC S526-M878
- FLASH RATE: 1Hz
- SYNCHRONIZED MODE NAC LOADING: MAXIMUM OF 35 SYNCHRONIZED STROBES PER NAC CIRCUIT.

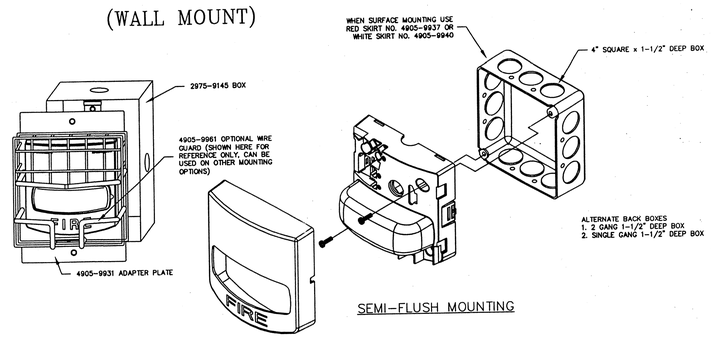


SEMI-FLUSH MOUNTING

*CURRENT DRAWS REFLECT STROBE FLASHING

| MODEL NUMBER | HOUSING COLOR | LETTERING COLOR | STROBE RATING | RMS CURRENT ● 16 VDC | 18 VDC | 24 VDC |
|---|---|---|---|---|---|---|
| 4906-9101 | RED | WHITE | 15cd | 60 mA | 55 mA | 41 mA |
| | | | 30cd | 94 mA | 85 mA | 63 mA |
| | | | 75cd | 186 mA | 169 mA | 123 mA |
| | | | 110cd | 252 mA | 226 mA | 164 mA |
| 4906-9103 | WHITE | RED | 15cd | 60 mA | 55 mA | 41 mA |
| | | | 30cd | 94 mA | 85 mA | 63 mA |
| | | | 75cd | 186 mA | 169 mA | 123 mA |
| | | | 110cd | 252 mA | 226 mA | 164 mA |

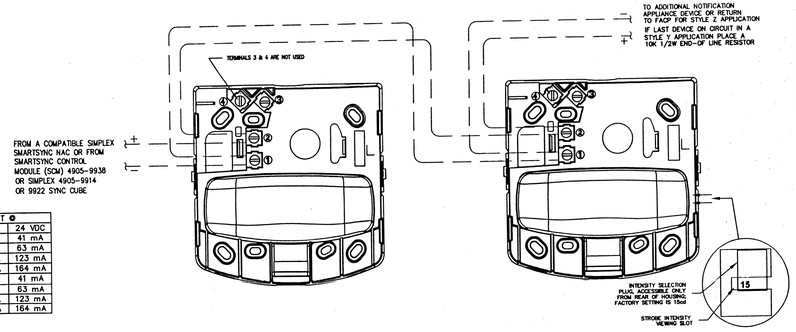


©2003 SIMPLEXGRINNELL LP
ALL RIGHTS RESERVED

tyco / Fire & Security
SimplexGrinnell
3888 LEECS AVENUE
CHARLESTON, SC 29405
SALES: 843-747-5254
SERVICE: 843-747-5254
FAX: 843-747-5286

| NO. | DATE | REVISION DESCRIPTION | CHKD BY |
|---|---|---|---|

FIRE ALARM SYSTEM
PERIPHERAL DEVICE DETAILS
BELLE HALL OFFICE BLDG 2
1671 BELLVIEW AVE
MT. PLEASANT, SC 29464

| | |
|---|---|
| DRAWN BY: | DATE: |
| DESIGNED BY: CED | DATE: 8-8-06 |
| APPROVED BY: DWP | DATE: 8-8-06 |
| PROJECT NUMBER: | |
| SHEET TITLE: BHOFT01 | |
| SHEET NUMBER: BHOFT01 | |